Simon Rack
SINCE 1964 - MANUFACTURER

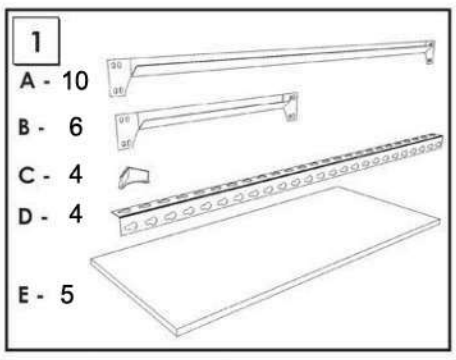

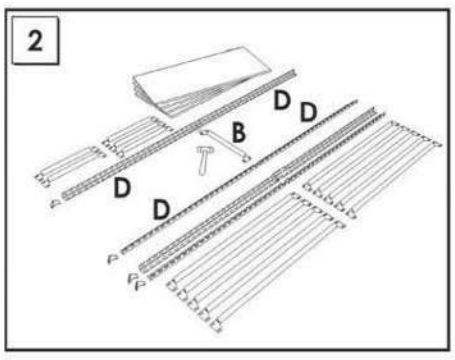

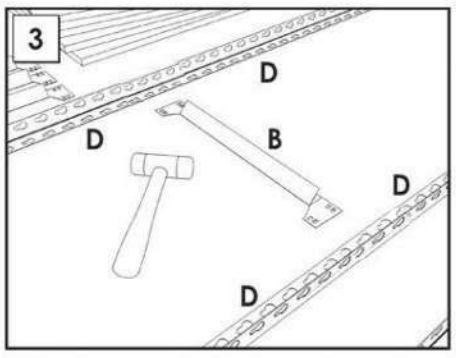

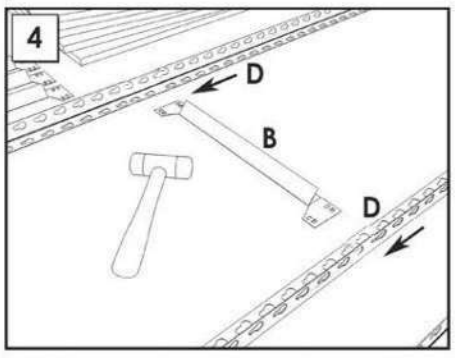

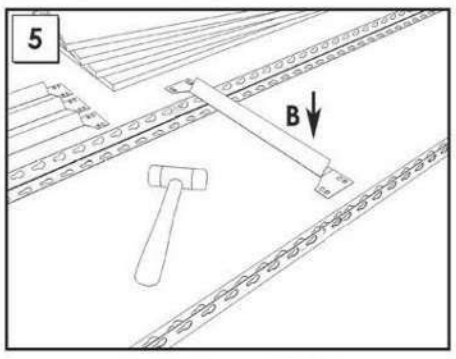

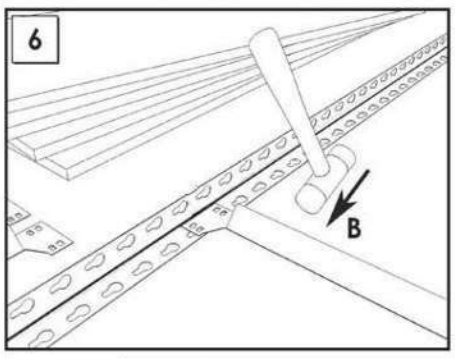

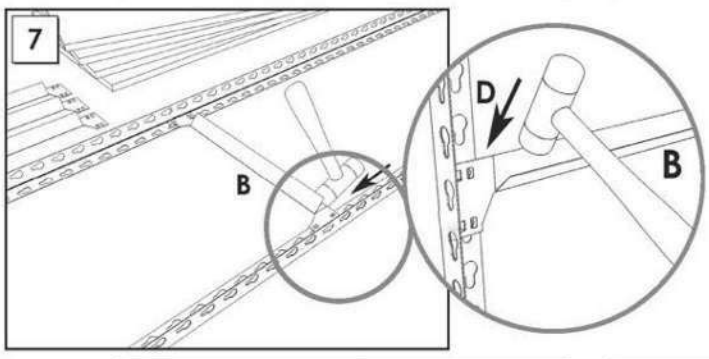

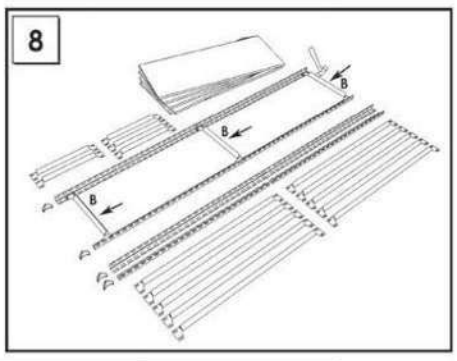

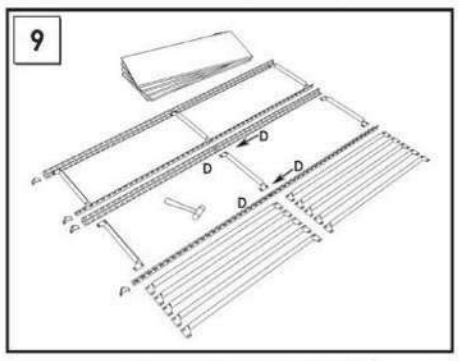

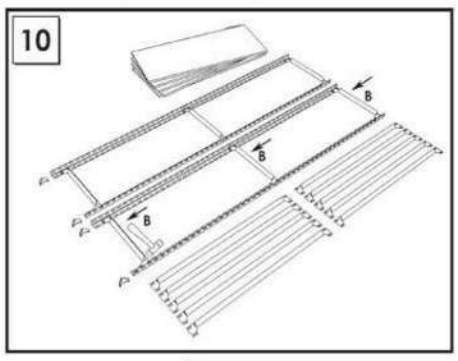

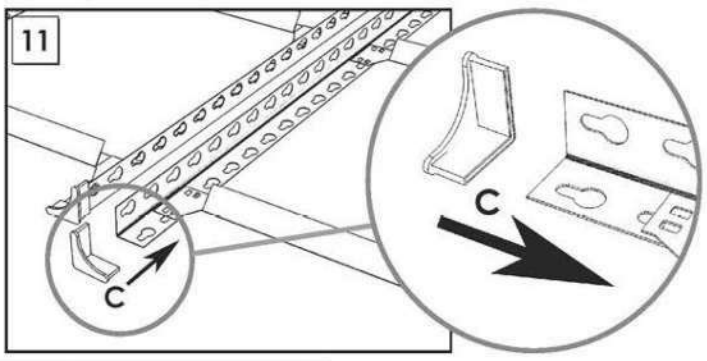

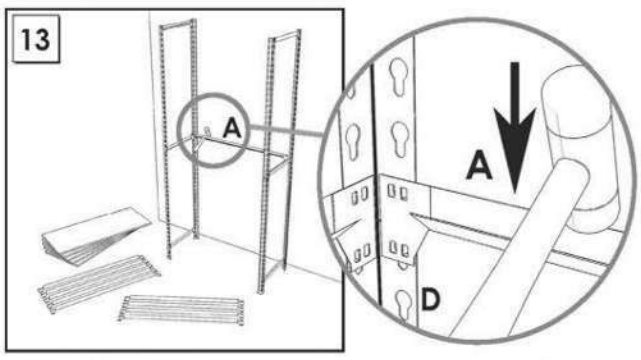

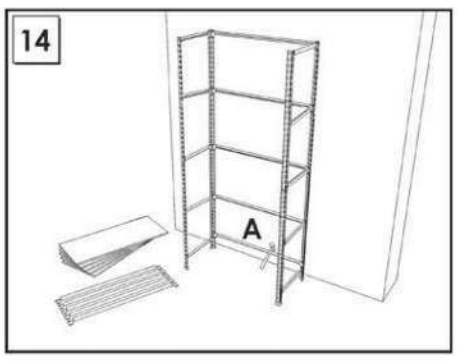

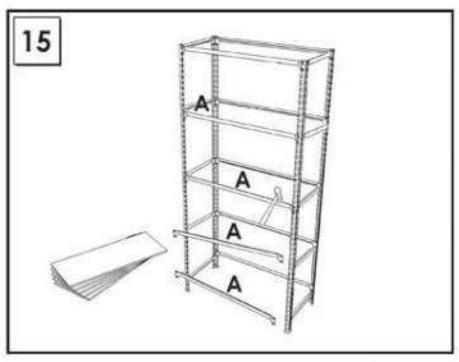

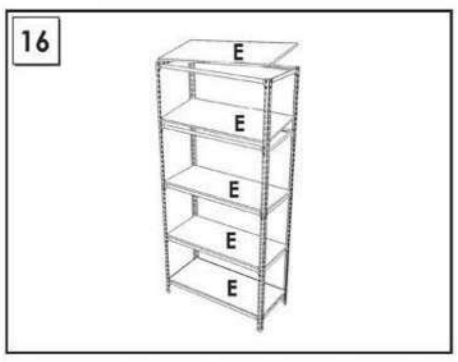

On-line instructions: www.instructionsrack.com/maderclick

www.simonrack.com • www.simonrack.com • www.simonrack.com • www.simonrack.com • www.simonrack.com • www.simonrack.com • www.simonrack.com • www.simonrack.com • www.simonrack.com

SIMONCLASSIC

SIMONCLICK

SIMONOFFICE

SIMONTALLER

BANCOS DE TRABAJO
WORK BENCHES

SIMONHOME

TAQUILLAS
LOCKER

SIMONTITÁN

SIMONINOX

SIMONPALET

SIMONLEVER

ALTILLOS Y PASILLOS ELEVADOS
PLATFORMS AND MEZZANINES